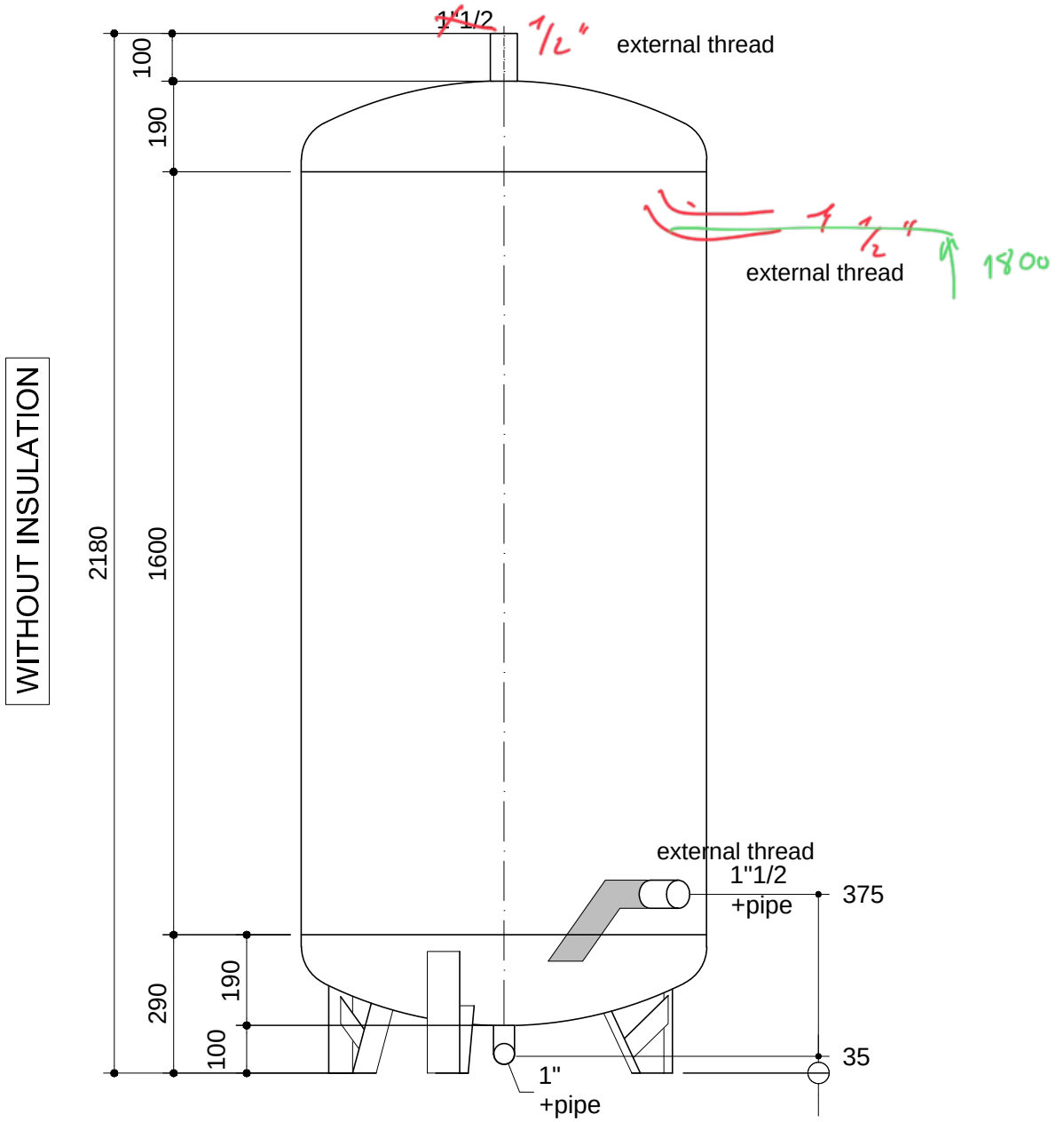

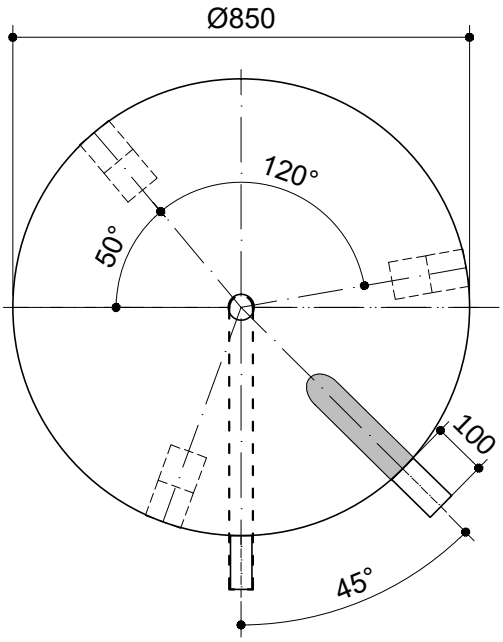

code: **99.02171340-26N**

N° 1 Pcs.

ATX 1070 N SPECIAL

CUSTOMER: **ISPAG**
Ref. ORDER: **KST300/124842**
Of: **17/02/2026**

MATERIAL: **Inox Aisi 316L**
EXTERNAL TREAT.: **Pickling**
INTERNAL TREAT.: **Pickling**
WORKING PRESSURE: **6 bar**
*TEST PRESSURE:*9 **bar**

R0 – 17/02/2026 – PRIMA EMISSIONE
R1 – 18/02/2026 – AGGIORNAMENTO DISEGNO

MATERIAL:	WEIGHT:	WORKING PRESSURE / TEST:	
Inox Aisi 316L	≈ 150 Kg	6 bar / 9 bar	
EXTERNAL TREATMENT	INTERNAL TREATMENT:	V	F
Pickling	Pickling		

DESIGNED BY:	APPROVED:	DATE:
Giovannini	Ing. Buccigrossi	17/02/2026
CUSTOMER: ISPAG		ORDER N°:
DESCRIPTION : ATX 1070 N SPECIAL		DRAWING CODE. --

The TML reserves the right to make constructional improvements of the product or changes without notice. This drawing cannot be copied, reproduced or shown to third parties without our approval.